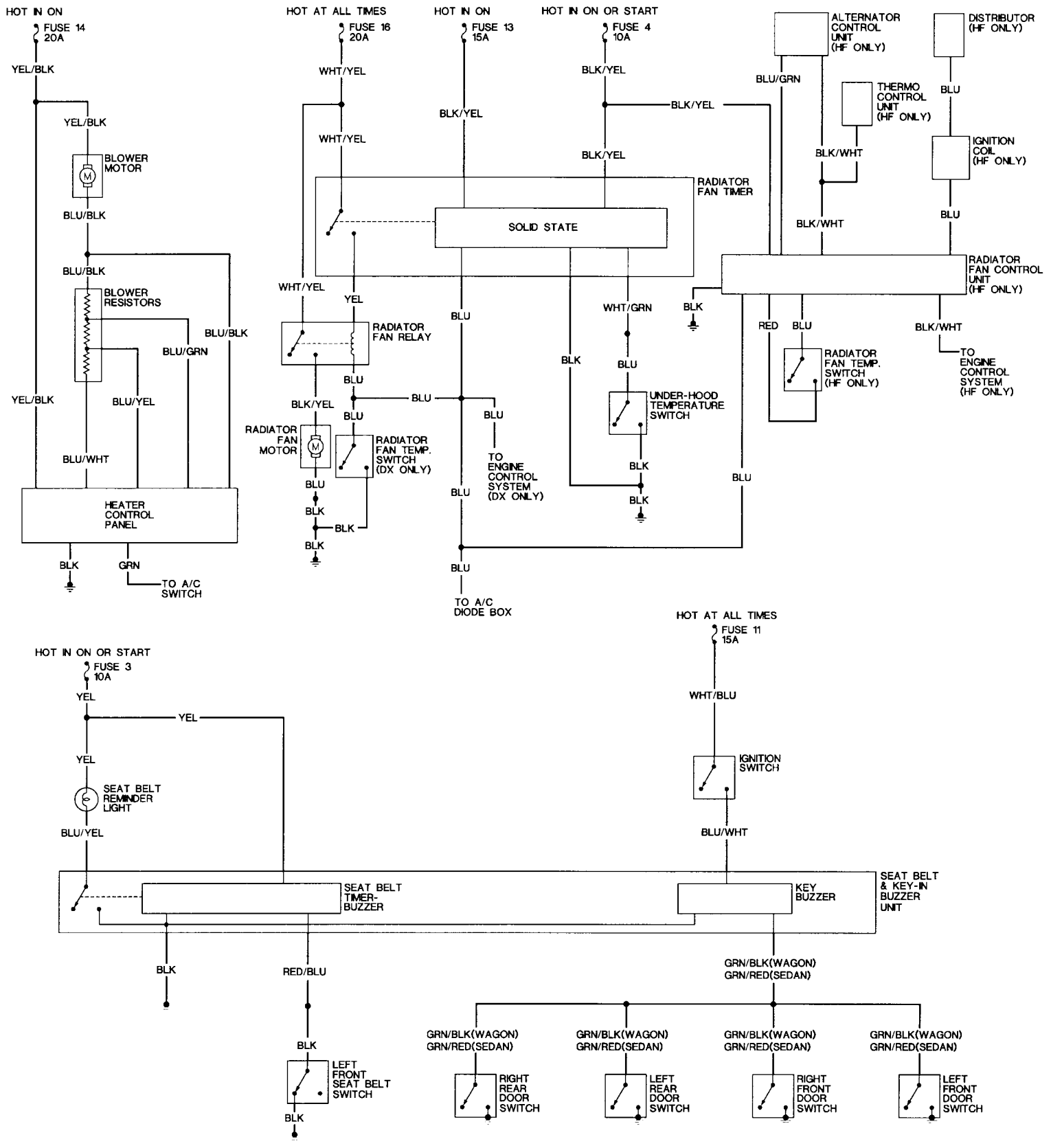
HOT IN ON
FUSE 14
20A
YEL/BLK
YEL/BLK
BLOWER MOTOR
BLU/BLK
BLU/BLK
BLOWER RESISTORS
BLU/BLK
BLU/GRN
YEL/BLK
BLU/YEL
BLU/WHT
HEATER CONTROL PANEL
BLK
GRN
TO A/C SWITCH
HOT AT ALL TIMES
FUSE 16
20A
WHT/YEL
WHT/YEL
WHT/YEL
YEL
RADIATOR FAN RELAY
BLU
BLK/YEL
BLU
BLU
RADIATOR FAN MOTOR
RADIATOR FAN TEMP. SWITCH (DX ONLY)
BLU
BLK
BLK
BLK
HOT IN ON
FUSE 13
15A
BLK/YEL
BLU
BLU
TO ENGINE CONTROL SYSTEM (DX ONLY)
BLU
BLU
TO A/C DIODE BOX
HOT IN ON OR START
FUSE 4
10A
BLK/YEL
BLK/YEL
BLK/YEL
RADIATOR FAN TIMER
SOLID STATE
WHT/GRN
BLK
BLU
UNDER-HOOD TEMPERATURE SWITCH
BLK
BLK
BLU
ALTERNATOR CONTROL UNIT (HF ONLY)
BLU/GRN
THERMO CONTROL UNIT (HF ONLY)
BLK/WHT
BLK/WHT
DISTRIBUTOR (HF ONLY)
BLU
IGNITION COIL (HF ONLY)
BLU
RADIATOR FAN CONTROL UNIT (HF ONLY)
BLK
RED
BLU
RADIATOR FAN TEMP. SWITCH (HF ONLY)
BLK/WHT
TO ENGINE CONTROL SYSTEM (HF ONLY)
HOT IN ON OR START
FUSE 3
10A
YEL
YEL
YEL
SEAT BELT REMINDER LIGHT
BLU/YEL
HOT AT ALL TIMES
FUSE 11
15A
WHT/BLU
IGNITION SWITCH
BLU/WHT
SEAT BELT TIMER-BUZZER
KEY BUZZER
SEAT BELT & KEY-IN BUZZER UNIT
BLK
RED/BLU
GRN/BLK(WAGON)
GRN/RED(SEDAN)
BLK
LEFT FRONT SEAT BELT SWITCH
BLK
GRN/BLK(WAGON)
GRN/RED(SEDAN)
RIGHT REAR DOOR SWITCH
GRN/BLK(WAGON)
GRN/RED(SEDAN)
LEFT REAR DOOR SWITCH
GRN/BLK(WAGON)
GRN/RED(SEDAN)
RIGHT FRONT DOOR SWITCH
GRN/BLK(WAGON)
GRN/RED(SEDAN)
LEFT FRONT DOOR SWITCH